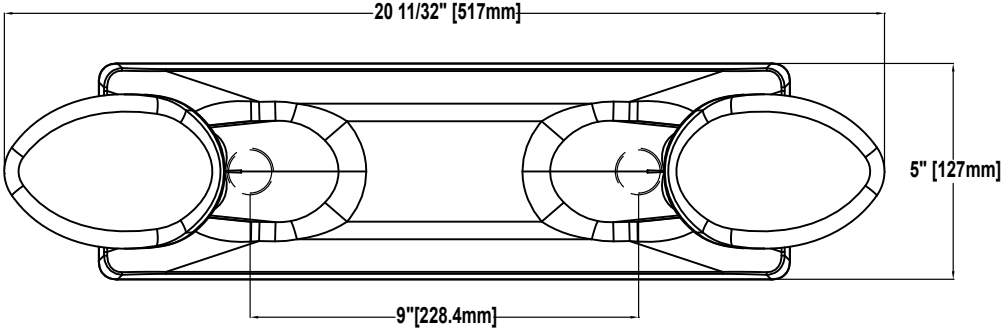
20 11/32" [517mm]
5" [127mm]
9"[228.4mm]

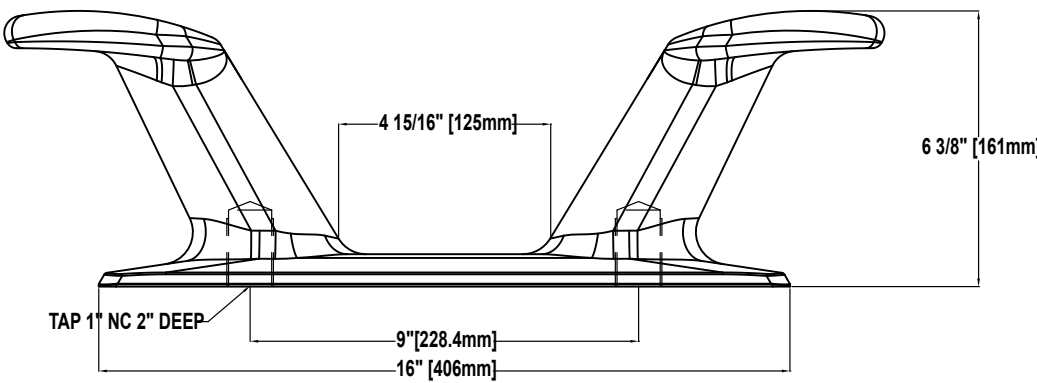
4 15/16" [125mm]
6 3/8" [161mm]
TAP 1" NC 2" DEEP
9"[228.4mm]
16" [406mm]