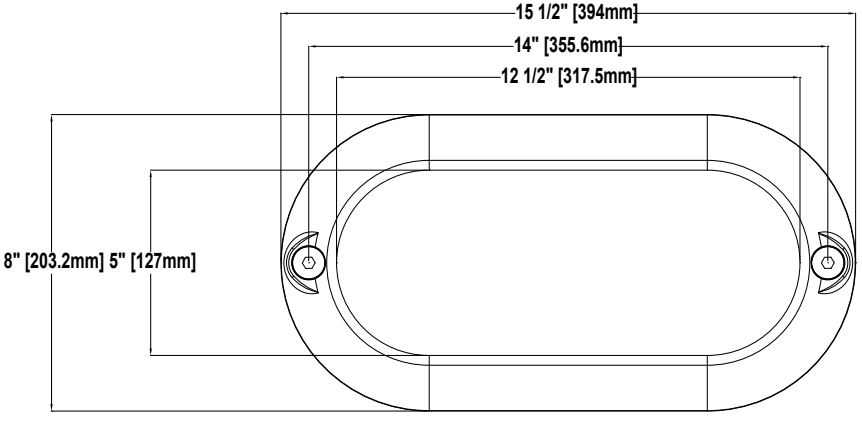
15 1/2" [394mm]
14" [355.6mm]
12 1/2" [317.5mm]
8" [203.2mm]
5" [127mm]

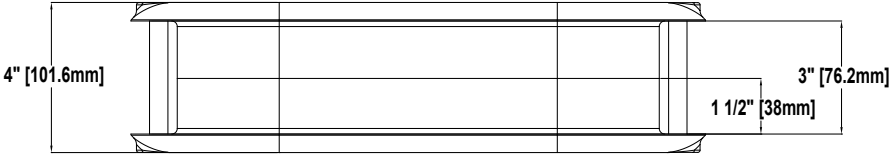
4" [101.6mm]
3" [76.2mm]
1 1/2" [38mm]