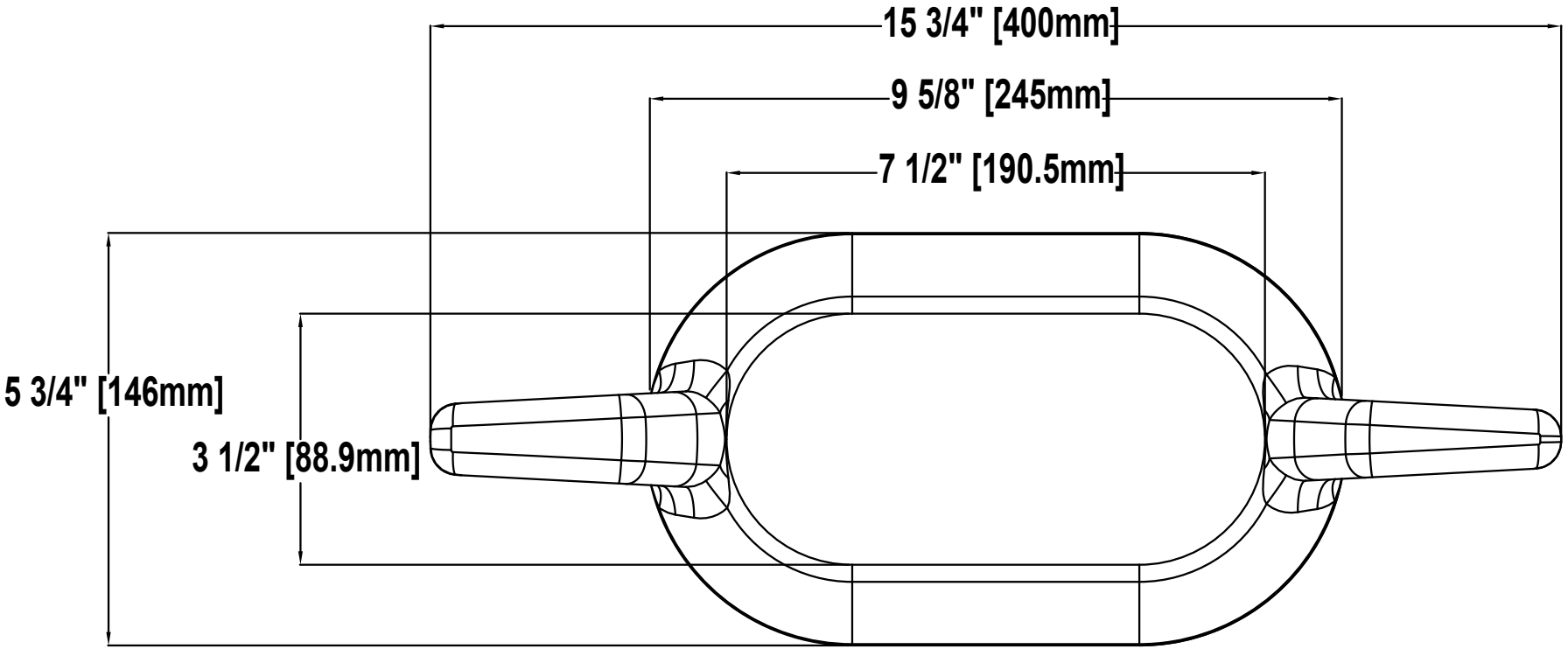
15 3/4" [400mm]
9 5/8" [245mm]
7 1/2" [190.5mm]
5 3/4" [146mm]
3 1/2" [88.9mm]

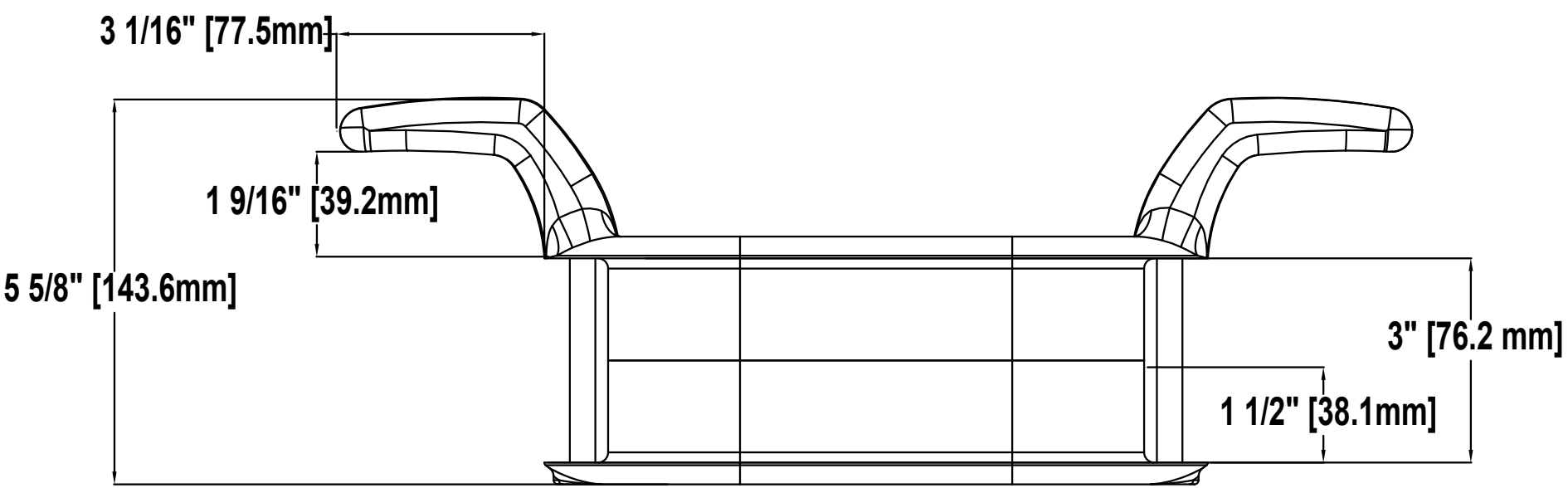
3 1/16" [77.5mm]
1 9/16" [39.2mm]
5 5/8" [143.6mm]
3" [76.2 mm]
1 1/2" [38.1mm]